A Revision of the Distillation Theory

J.L.Wang[1] and G.A. Mansoori[2]

The McCabe-Thiele graphical method is considered as a basic and simple technique to determine the number of theoretical stages in a distillation column. However, it is demonstrated that there are a number of weaknesses in this method when it is used for the distillation of subcooled liquid (or superheated vapor) feed. There is also the problem of determining the optimum location of the feed stage in this graphical method.

A revision of the distillation theory is presented in this paper which is free from such weaknesses. It is demonstrated that this revised distillation theory is applicable to graphical binary distillation as well as to the analytical stage-to-stage calculation method, the Ponchon-Savarit method and the short-cut approximate method of binary and multi-component distillations.

Considering the fact that the theory of distillation can be also used in other separation processes, such as absorption, stripping, leaching and extraction, the present revised theory could have widespread applications in such other separation processes.

INTRODUCTION

The classical McCabe-Thiele graphical method [1–3] for analysis of binary distillation was developed in 1925. From then on, this method has been used as a fundamental and simple technique to calculate the number of theoretical stages in a distillation column. In this paper, we point out the weaknesses associated with this graphical method and we propose a revised graphical distillation calculation method.

THE McCABE-THIELE GRAPHICAL METHOD

A continuous fractionating distillation column is shown in Figure 1. According to constant-molal-overflow (CMO) assumption $V_1 = \cdots = V_{n-1} = V_n = V$, $\overline{V}_1 = \cdots = \overline{V}_{m-1} = \overline{V}_m = \overline{V}$, where V and $\overline{V}$ are the flow rates of vapor in the enriching and stripping sections of the column, respectively, V_n is a general stage in the enriching section, and V_m is a general stage in the stripping section. Similarly for liquid flow rates $L_1 = \cdots = L_{n-1} = L_n = L$, $\overline{L}_1 = \cdots = \overline{L}_{m-1} = \overline{L}_m = \overline{L}$, where L and $\overline{L}$ are the flow rates of liquid in the enriching and stripping sections, respectively. It is also assumed that the column is adiabatic and steady state and the pressure is constant throughout the column.

One then can write the following overall total and component material balance equations for a binary mixture distillation:

$$F = D + W, \tag{1}$$

1. Department of Chemical Engineering, Daqing Petroleum Institute, Anda, Heilongjiang, P.R. China 151400.
2. Department of Chemical Engineering, University of Illinois, Chicago, IL 60680, USA (to whom correspondence should be sent).

Scientia Iranica, Vol. 1, No. 3, © Sharif University of Technology, October 1994.

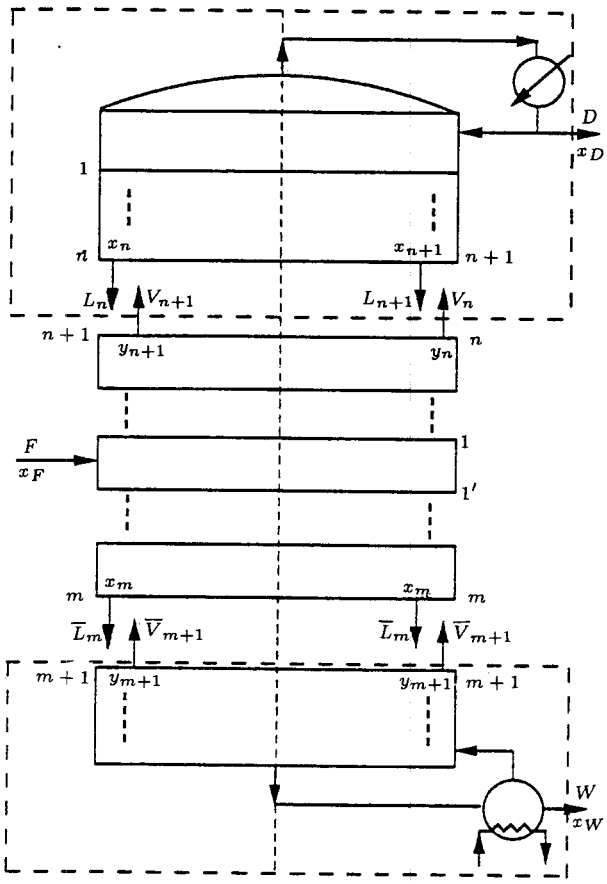

Figure 1. Material-balance diagrams of continuous fractionating column for McCabe-Thiele method (the left-side notations) and the revised method (the right-side notations).

$$Fx_F = Dx_D + Wx_W, \tag{2}$$

where F, D, W are feed, overhead and bottom flow rates and x_F, x_D, x_W are the related compositions of the more volatile component of the binary mixture, respectively.

The material balances over the enriching section of the column are:

$$V = L + D, \tag{3}$$

$$y_{n+1} = \frac{L}{V}x_n + \frac{D}{V}x_D\ . \tag{4}$$

By introducing the reflux ratio $R = \frac{L}{D}$, and knowing that $\frac{L}{V} = \frac{L}{L+D} = \frac{R}{R+1}$ and $\frac{D}{V} = \frac{1}{R+1}$, Equation 4 becomes:

$$y_{n+1} = \frac{R}{R+1}x_n + \frac{1}{R+1}x_D\ . \tag{5}$$

This is known as the equation of the operating line for the enriching section. Similarly, the material balances for the stripping section for the column are:

$$\overline{V} = \overline{L} - W, \tag{6}$$

$$y_{m+1} = \frac{\overline{L}}{\overline{V}}x_m - \frac{W}{\overline{V}}x_W. \tag{7}$$

Equation 7 is the equation of the operating line for the stripping section.

The feed type is characterized by using a factor q, defined as the number of moles of liquid flow in the stripping section that results from the introduction of each mole of feed, i.e.,

$$q = (\overline{L} - L)/F \quad \text{or} \quad \overline{L} = L + qF. \tag{8}$$

Similarly it can be shown that,

$$1 - q = (V - \overline{V})/F \text{ or } V = \overline{V} + (1 - q)F. \tag{9}$$

In order to locate the intersection of the operating lines of the enriching and stripping sections, let $y_{n+1} = y_{m+1} = y, x_n = x_m = x$. Then from Equations 5 and 7 and the definition of q we get:

$$y = \frac{q}{q-1}x - \frac{1}{q-1}x_F\ . \tag{10}$$

This is known as the equation of the feed line.

The two operating lines and the feed line are plotted on the $x - y$ diagram as shown by Figure 2. The number of theoretical stages can be determined by using these lines and the equilibrium line. The step by step construction can start at either the bottom of the stripping section operating line or the top of the enriching section operating line. Assuming that we start at the top of the enriching section operating line, we draw triangular cascades between the operating line and the equilibrium curve. Each of these triangles represents a theoretical stage. In order to get a minimum number of theoretical stages, we switch from enriching operating line to stripping operating line when the triangle straddles the intersection of the operating lines. By using this

method, the number of theoretical stages is defined.

Minimum Reflux Ratio

The minimum reflux is obtained when the feed line, equilibrium curve and the operating line of the enriching section meet at one point. The minimum reflux is the minimum allowable reflux for the separation. For saturated feed, the operating lines for different values of reflux are shown in Figure 2. The slope of the enriching-section operating line is $R/(R+1)$. For the four different cases of operating lines demonstrated in Figure 2, the slope, $R/(R+1)$, decreases as we move from 1 to 4 ($R_1 > R_2 > R_3 > R_4$). For a case like number 4, where the two operating lines cross each other on the left side of the equilibrium curve, distillation separation cannot be achieved. Thus, the lowest value of R (minimum reflux ratio=R_3) is where the two operating lines meet with the equilibrium curve. As a result, the minimum reflux ratio can be calculated from the following equation:

$$\frac{R_{\min}}{R_{\min}+1} = \frac{x_D - y_f}{x_D - x_f} \quad \text{or} \quad R_{\min} = \frac{x_D - y_f}{y_f - x_f}, \tag{11}$$

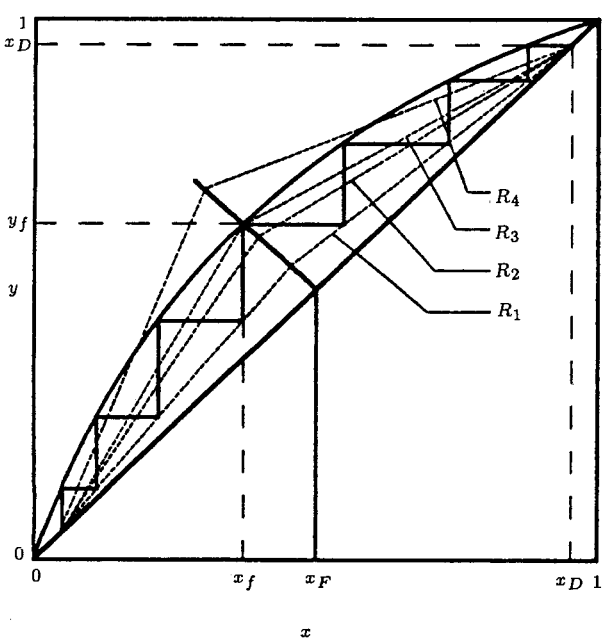

Figure 2. Reflux and McCabe-Thiele diagram.

where x_f and y_f are concentrations at the feed stage. The above review is needed in order to discuss the shortcomings of the McCabe-Thiele method and present a revised graphical method.

SHORTCOMINGS OF THE McCABE-THIELE METHOD

A number of shortcomings exist in the McCabe-Thiele method when it is applied to the cases of subcooled (or superheated) feed:

1. When the feed is a subcooled liquid (or a superheated vapor), on the assumption that x_F, x_B, x_D, L and D are all constants, the number of theoretical stages tends to a minimum according to the McCabe-Thiele method, which is not correct. As an example, in Figure 3a, the McCabe-Thiele graphical method is demonstrated when the feed is a subcooled liquid (when the temperature of the feed drops, the slope of the operating line will be close to the diagonal line of the $x - y$ diagram). According to this figure, the number of theoretical stages ($N_{\min}$) tends to a minimum. Meanwhile, the number of theoretical stages (N_n) for the enriching section tends to zero. Similarly, when the feed is superheated, the slope of the operating line will be very close to the diagonal line, the number of theoretical stages again tends to a minimum and the number of theoretical stages (N_m) for stripping section tends to zero, as shown in Figure 3b. Since the separation process starts only when the feed is saturated, the more the thermal state of feed deviates from the saturated state, the larger the number of theoretical stages needed. The McCabe-Thiele graphical method does not indicate this fact.

2. The McCabe-Thiele method sometimes predicts negative minimum reflux ratio, which is physically meaningless. For example, according to Figure 3c, for the more volatile component in a binary mixture, the concentrations of feed, bottom product and overhead product are, respectively, $x_F = 0.50$, $x_B = 0.10$, $x_D = 0.90$. When feed is a subcooled liquid, the coordinates of the intersection of feed line and

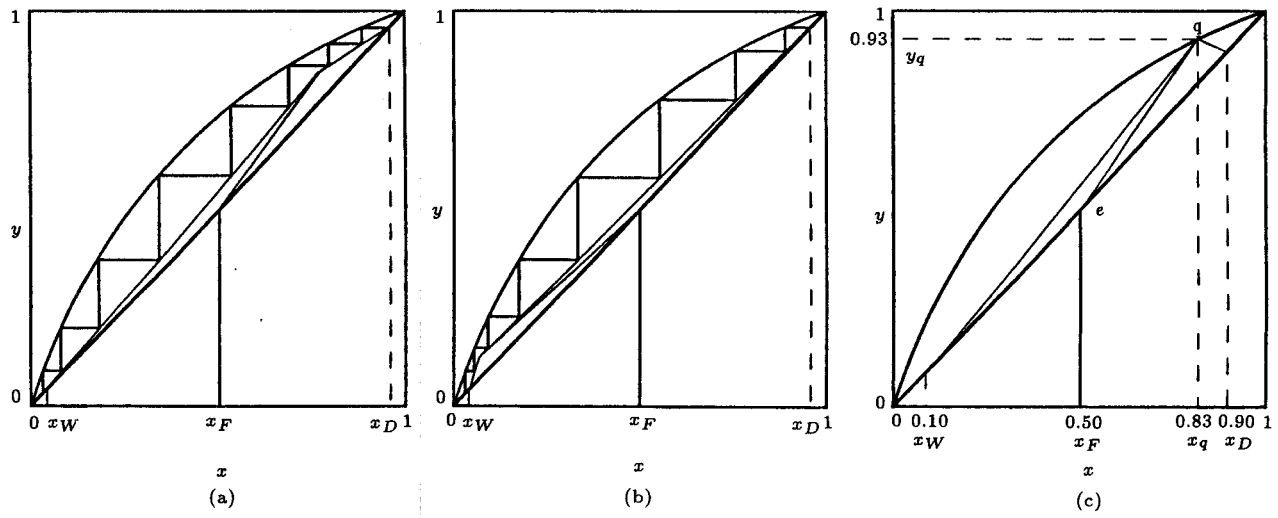

Figure 3a. McCabe-Thiele graphical calculation for a subcooled liquid feed.

Figure 3b. McCabe-Thiele graphical calculation for a superheated vapor feed.

Figure 3c. Minimum reflux.

the equilibrium curve are $x_q = 0.83, y_q = 0.93$. The minimum reflux ratio can be calculated from this data (Figure 3c):

$$R_{\min} = \frac{x_D - y_q}{y_q - x_q} = \frac{0.90 - 0.93}{0.93 - 0.83} = -0.3,$$

which is negative and meaningless.

According to the McCabe-Thiele method, the limits of the minimum reflux ratio are:

$$-\infty \leq R_{\min} \leq \infty,$$

which is also physically meaningless. These limits are derived when the feed is either a superheated vapor or a subcooled liquid (when the enriching section operating line coincides with the diagonal line on the $x - y$ diagram).

3. Some conceptual errors will appear in the derivation of q-line, Equation 10, when the feed is a subcooled liquid (or a superheated vapor); the equation of the feed line is derived by combining the equations of the two operating lines. The McCabe-Thiele method uses the hypothesis that the intersection of the two operating lines always exists. This is not the case for a subcooled liquid (or a superheated vapor) feed because the feed stage is not a theoretical stage in these cases. There must be a heating (or cooling) section to bring the feed to its saturated state in order to start the separation process. The stages of the heating (or cooling) section are only heat-exchange stages, so neither of these two operating lines can control this section. Apparently the operating lines of the enriching and stripping sections will not meet when the feed is superheated (or subcooled).

A NEW GRAPHICAL METHOD

In this section, we propose a new graphical method which is free from the shortcomings discussed above. To do this, we first present the relationship between $T - x, y$ and $x - y$ diagrams needed in this new technique. Then we will define a new factor (K) which replaces the q factor used in the McCabe-Thiele method. Also, the operating lines and feed line equations will be revised by using the K factor. This new technique will be applicable for all cases of feed conditions whether saturated, superheated or subcooled.

Relationship Between T − x, y and x − y Diagrams

In the new graphical method, we define a graphical relationship between $T - x, y$ and $x - y$ diagrams. Figure 4a demonstrates how

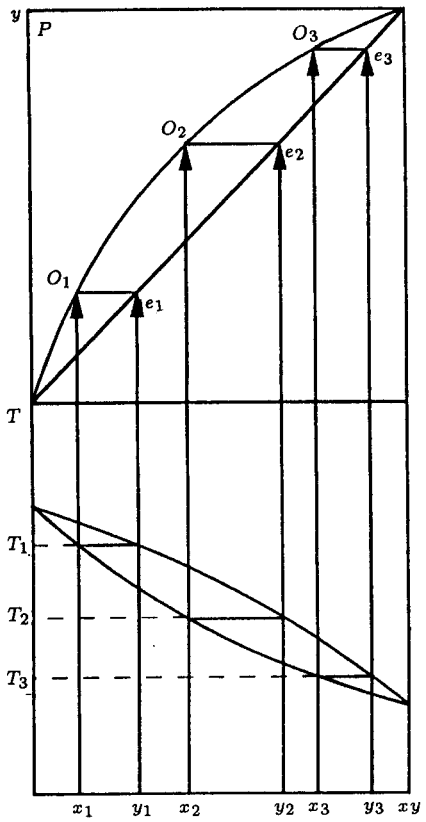

Figure 4a. $T - x, y$ and $x - y$ diagrams.

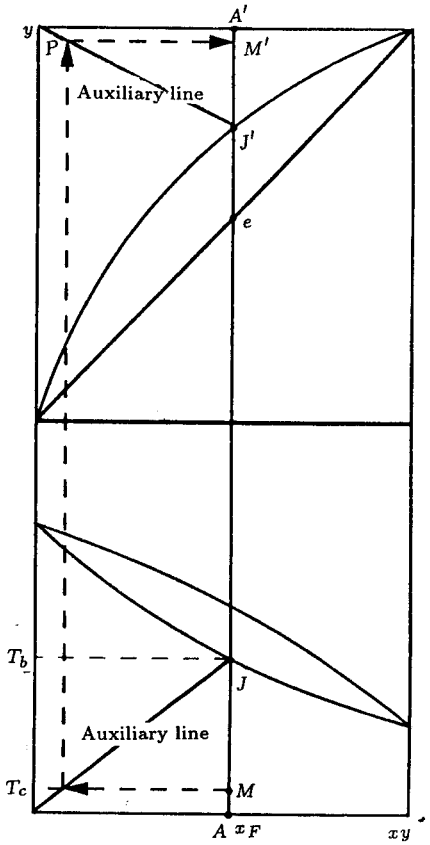

Figure 4b. $T - x, y$ and $x - y$ diagrams for a subcooled liquid feed.

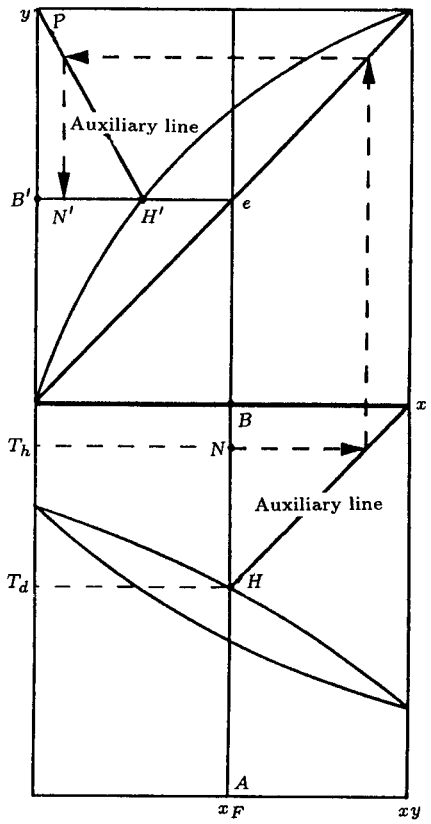

Figure 4c. $T - x, y$ and $x - y$ diagrams for a superheated vapor feed.

we relate $x - y$ and $T - x, y$ diagrams. For a given point on one diagram, we can find its corresponding point on the other diagram. For example, we define points M', N' corresponding to points M, N for the cases of subcooled and superheated feed, respectively. Figures 4b and 4c show how to draw points M' and N' on the $x - y$ diagram corresponding to points M and N that represent the same state on the $T - x, y$ diagram. Point M represents a subcooled liquid state and N represents a superheated vapor state. Provided points M' and N' are the feed conditions, then lines eM' for Figure 4b and eN' for Figure 4c will represent the feed lines in the two cases of subcooled and superheated feed.

Definition of the Phase Change Line

In the $T - x, y$ diagram (at a given pressure), the two saturated lines divide the diagram into three parts (subcooled, saturated and superheated sections). For a given feed composition, x_F, the feed temperature could be at T_c (subcooled feed), T_b (feed at bubble point) T_d (feed at dew point) or T_h (superheated feed). For points M, J, H and N on the $T - x, y$ diagram we locate the corresponding points M', J', H' and N' on the $x - y$ diagram. The straight line $\overline{AMJHNB}$ and the path $A'M'J'H'N'B'$ are called "phase change line" and "phase change path", respectively.

Material Balance and Operating Lines for Two Component Systems

For a continuous fractionating distillation column, Figure 1, the same material balance equations described in the McCabe-Thiele method are still valid. However, in order to characterize

Table 1. The values of K with different feed types.

Feed Condition	Phase	K
Subcooled liquid	Liquid	=1
Liquid at its bubble point	Vapor and liquid	≈ 1
Vapor-liquid mixture	Vapor and liquid	=0~1
Vapor at its dew point	Vapor and liquid	≈ 0
Superheated vapor	Vapor	=0

the feed types, we define a new factor K as:

$$K = \frac{\text{number of moles of liquid in the feed}}{\text{number of moles of the feed}}$$

K will have different numerical values with respect to the thermal conditions of the feed as it is shown in Table 1.

The material balance over the enriching section of the column, Figure 1, will give the operating line equation for the enriching section:

$$x_n = \frac{R+1}{R} y_{n-1} - \frac{1}{R} x_D \ . \tag{12}$$

Considering that the contribution of feed to the internal flow of liquid is $K \times F$, the following mass balance equation (instead of Equation 8) will hold in the stripping section:

$$\overline{L}_m = L_n + KF \ . \tag{13}$$

By substituting Equations 13 and 6 into 7 and with the assumption of constant molar overflow, we derive a new operating line equation in the stripping section as follows:

$$y_m = \frac{L+KF}{L+KF-W} x_{m-1} - \frac{W}{L+KF-W} x_W \ . \tag{14}$$

Similarly, considering that the contribution of feed to the internal flow of vapor is $(1-K)F$, the following mass balance equation (instead of Equation 9) holds in the enriching section:

$$V = \overline{V} + (1-K)F \ . \tag{15}$$

In order to find the intersection of the two operating lines, we set $y_{n+1} = y_{m+1} = y$ and $x_n = x_m = x$. Then from Equations 5 and 15 and the definition of K we get:

$$y_K = \frac{K}{K-1} x_K - \frac{1}{K-1} x_F \ . \tag{16}$$

This is the new feed line equation. We then plot the feed-line on the $x-y$ phase diagram for various feed conditions as shown in Figure 5:

1. For a subcooled liquid feed, $K = 1$, the feed-line (or K-line) is line eM'.
2. For feed at its bubble point, $K \approx 1$, the feed-line (or K-line) is line eJ'.

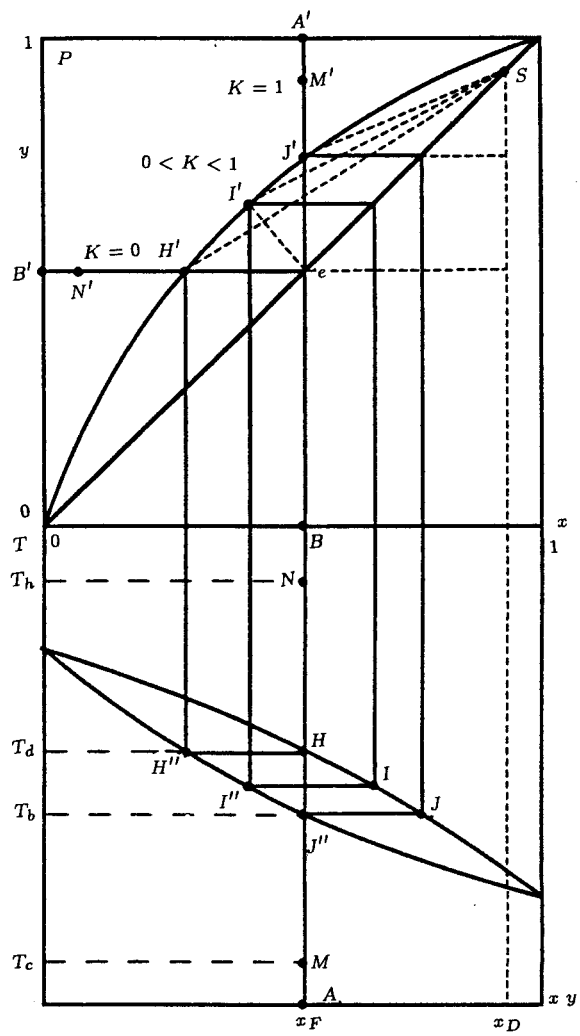

Figure 5. Range of minimum reflux ratio and phase change line of the feed on $T-x,y$ and $x-y$ diagrams.

3. For feed consisting of a mixture of liquid and vapor, $0 < K < 1$, the feed-line (or K-line) is line eI'.

4. For feed at its dew point, $K \approx 0$, the feed-line (or K-line) is line eH'.

5. For a superheated vapor feed, $K = 0$, the feed-line (or K-line) is line eN'.

Minimum Reflux Ratio

The minimum reflux is again obtained when the feed line, equilibrium curve and the operating line of the enriching section meet at one point. Line SI' is the operating line of the enriching section. (point S is the intersection of the vertical line at x_D and the diagonal line). According to Equation 11 the slope of line SI' is $R/(R+1)$. For all the possible feed conditions, the slope of the feed-line would vary between zero and infinity. Thus, the range in which line SI' can vary is in between lines SH' and SJ'. Slope of line SJ' gives us $R_{\min,b}$ the minimum reflux ratio at the bubble point and slope of line SH' gives us $R_{\min,d}$ the minimum reflux ratio at the dew point. Since lines SJ' and SH' are the extremes of the enriching section operating line, then the minimum reflux ratio will have finite bounds (shown on Figure 5),

$$R_{\min,b} \leq R_{\min} \leq R_{\min,d} \ ,$$

which is physically meaningful. This is not the case for the McCabe-Thiele method.

Concentrations at the Feed Stage

In order to calculate the minimum reflux ratio from equation $R_{\min} = \frac{x_D - y_f}{y_f - x_f}$, we need to find the concentrations of vapor and liquid phases at the feed stage.

1. In the case where the feed is at its bubble point, the feed stage compositions are:

$$x_f = x_F \quad \text{and} \quad y_f = \frac{\alpha x_F}{1 + (\alpha - 1)x_F} \ ,$$

where the equation for y_f is derived from the definition of the relative volatility:

$$\alpha = [y(1-x)]/[x(1-y)] \ .$$

2. In the case where the feed is a liquid-vapor mixture, we can calculate concentration at the feed stage by using the relative volatility definition and the K-line equation, Equation 16, to get:

$$x_f = \frac{(\alpha-1)x_F + \alpha(K-1) - K}{2K(\alpha-1)} + \frac{\sqrt{[K-(\alpha-1)x_F - \alpha(K-1)]^2 + 4Kx_F(\alpha-1)}}{2K(\alpha-1)}$$

and

$$y_f = \frac{\alpha x_f}{1 + (\alpha-1)x_f} \ .$$

3. In the case where the feed is at its dew point, the feed stage compositions are:

$$x_f = \frac{y_F}{a - (a-1)y_F} \quad \text{and} \quad y_f = y_F \ .$$

At the minimum reflux ratio, when the two operating lines and the phase equilibrium curve meet at one point, the number of theoretical stages becomes infinity. There will be an invariant zone at the bottom of the enriching section and the top of the stripping section.

4. In the case where the feed is a subcooled liquid, the minimum reflux ratio of distillation column will be controlled by the enriching section operating line. At the minimum reflux, there will be an invariant zone at the bottom of the enriching section, so the feed line and enriching section operating line will meet the phase equilibrium curve at one point. Therefore, the calculation of minimum reflux ratio will be the same as with saturated liquid feed. The concentrations of the vapor entering the enriching section and the liquid entering the stripping section are the same as when the feed is at its bubble point.

5. In the case where the feed is a superheated vapor, the reflux ratio will be controlled by the operating line of the stripping section. At the minimum reflux, there will be an invariant zone at the top of the stripping section. So the feed line and the stripping section operating line will meet the phase equilibrium curve at one point. Therefore, the calculation of minimum reflux ratio will be the same as that

with saturated vapor feed. The concentrations of the vapor entering the enriching section and the liquid entering the stripping section are the same as when the feed is at its dew point.

PROPOSED REVISED GRAPHICAL METHOD

In this section, a graphical method for the revised McCabe-Thiele method is presented where we also define the concentrations of liquid and vapor and the temperatures at each theoretical stage by using the $x - y$ diagram along with the $T - x, y$ diagram. Here again, we assume constant-molal-overflow (CMO) for a steady state column operating adiabatically and at constant pressure.

Feed at its Saturated State

On the $x - y$ diagram, Figure 6b, we plot the feed-line using Equation 16 with $0 < K < 1$, the operating line of the enriching section, Equation 7, and the operating line of the stripping sections, Equation 14. Then, we draw cascades starting from the intersection of the feed line and the equilibrium curve towards both the enriching and stripping sections. The stage which covers the intersection of the feed-line and phase equilibrium curve corresponds to the feed stage and also the first stage of the stripping section. The stages above the feed-line are for the enriching section, and the ones below the feed-line are for the stripping section.

In Figures 6a and 6c, the revised cascade method is presented when the feed is at its bubble point ($K \approx 1$) and its dew point ($K \approx 0$), respectively.

Feed at its Subcooled Liquid State

In this case the feed temperature is below its bubble point ($T_F < T_b$). Distillation process will begin only when the feed is heated up to its bubble point temperature. For this, a heating section is needed in the column located below the feed entrance and above the stripping section. As a result, the enriching and stripping sections will be separated. Then the two operating lines will no longer meet. In what follows, we will first present the calculation procedure for the number of heating stages and then we discuss the graphical method for calculation of the number of theoretical stages in the enriching and stripping sections.

Calculation of the Heating Requirements

This is performed by using the following equation:

$$\dot{Q}_h = FC_{PL}(T_b - T_F) \ ,$$

where $\dot{Q}_h$ = rate of heat transfer at heat exchanges stages, F = molar flow rate of feed, C_{PL} = heat capacity of liquid at constant pressure, T_b = bubble point temperature and T_F = feed temperature. No matter what kind of heat transfer is involved in the heating section, we can always expect the heat flux to be proportional to a driving force. In this case, the driving force is the temperature difference of the cold liquid and a hot vapor. For a hypothetical total heat exchange area, A_c, we can write:

$$A_c = \frac{\dot{Q}_c}{K_c \Delta T_m} \ ,$$

where K_c = local overall heat-transfer coefficient (determined empirically) and $\Delta T_m = \frac{\Delta T_2 - \Delta T_1}{ln(\Delta T_2/\Delta T_1)}$ is a logarithmic mean temperature difference. One may define $\Delta T_1 = T_{ho} - T_{ci}$ and $\Delta T_2 = T_{hi} - T_{co}$, where T_{hi} = vapor temperature entering heating section from stripping section, T_{ho} = temperature of the liquid which is condensed from vapor temperature entering heating section from stripping section, T_{co} = temperature of a mixture made up of feed and liquid entering heating section from enriching section which is approximated as $T_{co} = \frac{FT_F + L_n T_{ci}}{F + L_n}$, T_{ci} = temperature of liquid leaving the enriching section (see Figure 7b). From this, one can calculate the number of heating stages using the following equation:

$$N_c = \frac{A_c}{A_a} \ ,$$

where N_c = number of heating stages and A_a = effective heat transfer area for each heat

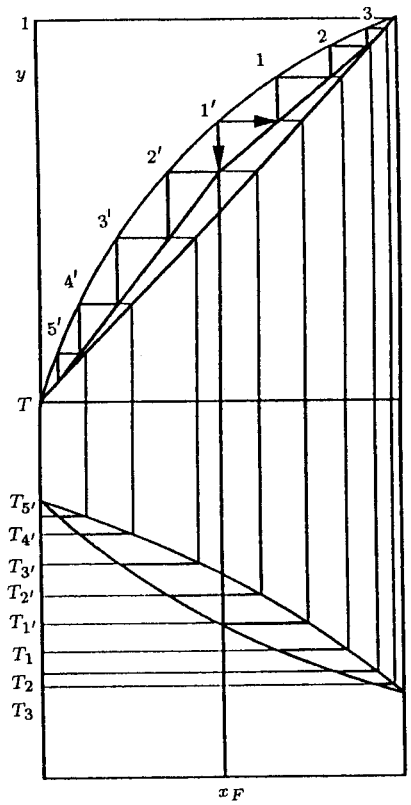

Figure 6a. $T - x, y$ diagram and the revised graphical construction on the $x - y$ diagram for the saturated liquid feed.

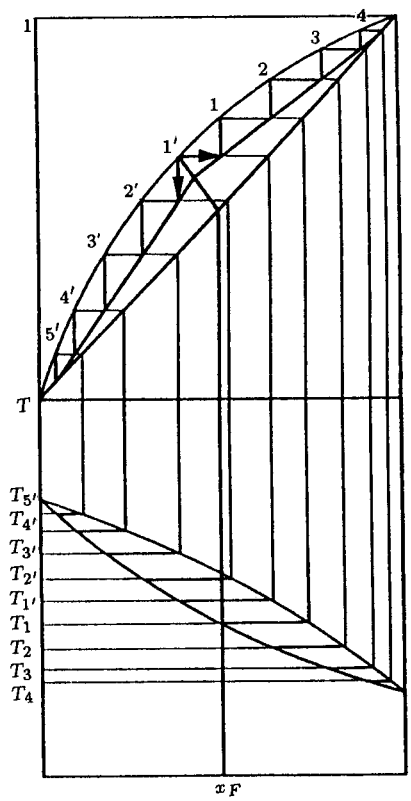

Figure 6b. $T - x, y$ diagram and the revised graphical construction on the $x - y$ diagram for the liquid-vapor mixture feed.

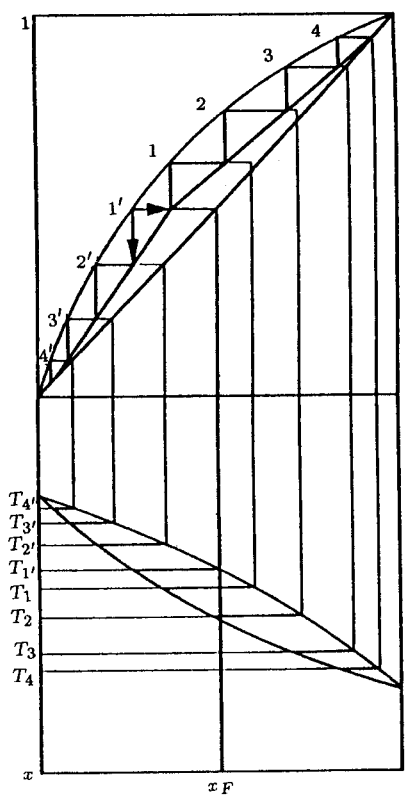

Figure 6c. $T - x, y$ diagram and the revised graphical construction on the $x - y$ diagram for the saturated vapor feed.

transfer stage determined empirically. The more the feed condition deviates from the saturated state, a larger number of heating stages will be needed represented by a longer length of line $J'M'$ in Figure 7a.

Enriching and Stripping Sections

On the $x - y$ diagram, Figure 7a, we plot a vertical feed-line ($K = 1$) and the operating lines for the enriching, Equation 12 and stripping, Equation 7, sections. In Equation 7, we replace $\overline{L}$ and $\overline{V}$ with the following expressions:

$$\overline{L} = L + F + L'_m \ , \tag{17}$$

$$\overline{V} = \overline{L} - W = L + F + L'_m - W \ . \tag{18}$$

In the above expressions L'_m is due to condensation of vapor in the heating section due to subcooled feed. Equation 17 is obtained by the material balance over the heating section shown in Figure 7b. L'_m is calculated by the following equation:

$$L'_m = \frac{\dot{Q}_c}{\lambda} = \frac{FC_L(T_b - T_F)}{\lambda} \ ,$$

where λ is the effective latent heat of evaporation for the vapor condensing in the heating section. Substituting Equations 17 and 18 in Equation 7, we get the operating line equation in the stripping section:

$$y_{m+1} = \frac{L + F + L'_m}{L + F + V'_m - W} x_m - \frac{W}{L + F + V'_m - W} x_W \ .$$

A representative figure corresponding to this case is shown by Figure 7a. The number of

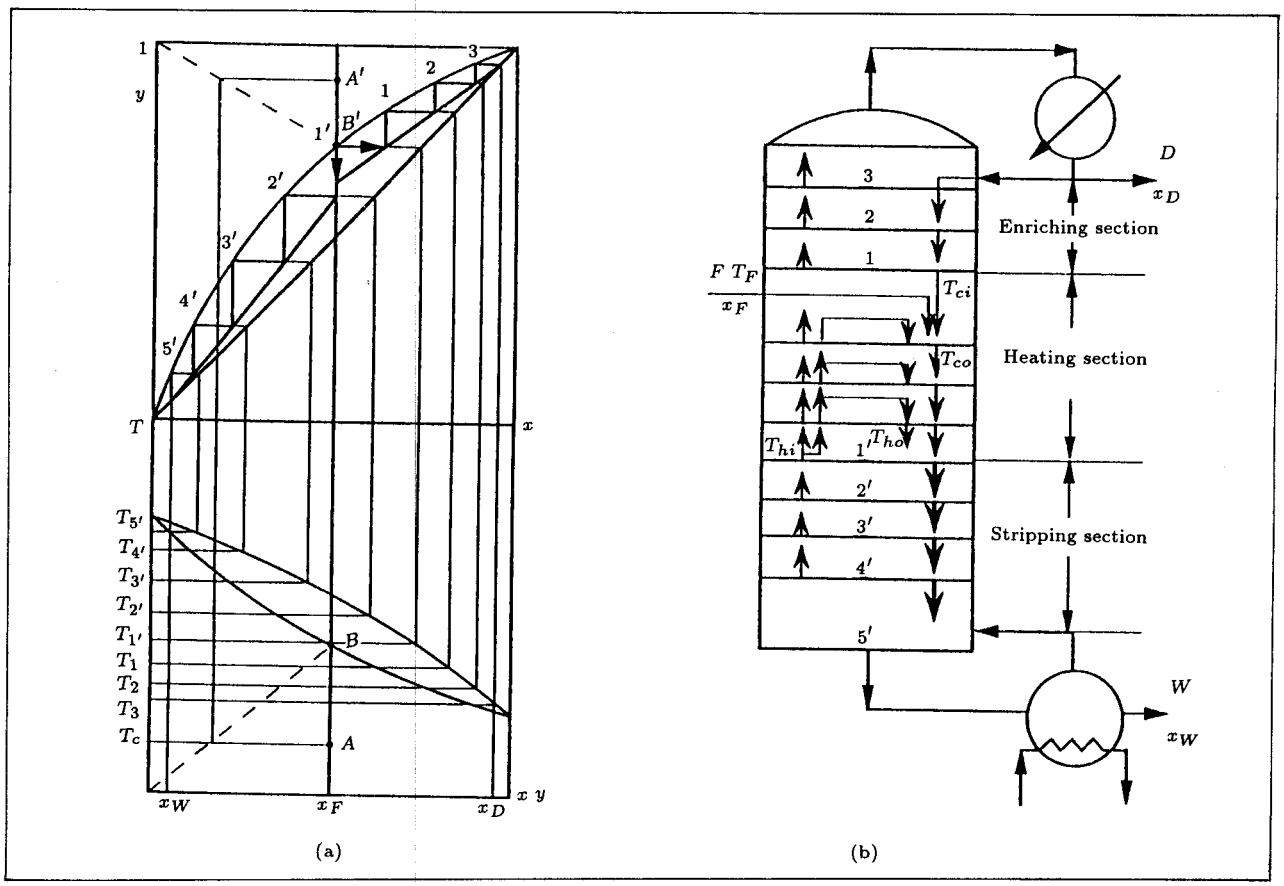

Figure 7. Proposed graphical method in the case of a subcooled liquid feed.

theoretical stages in the enriching section are determined by starting at the intersection point of the feed line and the operating line of the enriching section and stepping upwards in the enriching section. The number of theoretical stages in the stripping section are determined by starting at the intersection point of the feed line and the operating line of the stripping section and stepping downwards in the stripping section. For the case of Figure 7, the number of stages in the enriching section are three and in the stripping section are five. The heating section is represented as the subcooled line AB on the $T-(x,y)$ diagram and the subcooled line $A'B'$ on the $x-y$ diagram.

Feed at its Superheated Vapor State

In this case, the feed temperature is higher than its dew point ($T_F > T_d$) and the distillation process will begin only when the feed is cooled down to its dew point temperature. For this, a cooling section is needed in the column located above the feed entrance and below the enriching section. As a result, the enriching section and the stripping section will be separated and the two operating lines will no longer meet. In what follows, we will first present the calculation procedure for the number of cooling stages and then we discuss the graphical method for calculation of the number of theoretical stages in the enriching and stripping sections.

Calculation of the Cooling Requirement

This is performed by using the following equation:

$$\dot{Q}_h = FC_{PV}(T_F - T_d)$$

where $\dot{Q}_h$= rate of heat transferred at heat exchange stages, F= molar flow rate of feed, C_{PV} = heat capacity of vapor at constant pressure, T_d = dew point temperature, T_F = feed temperature. Similar to the subcooled liquid

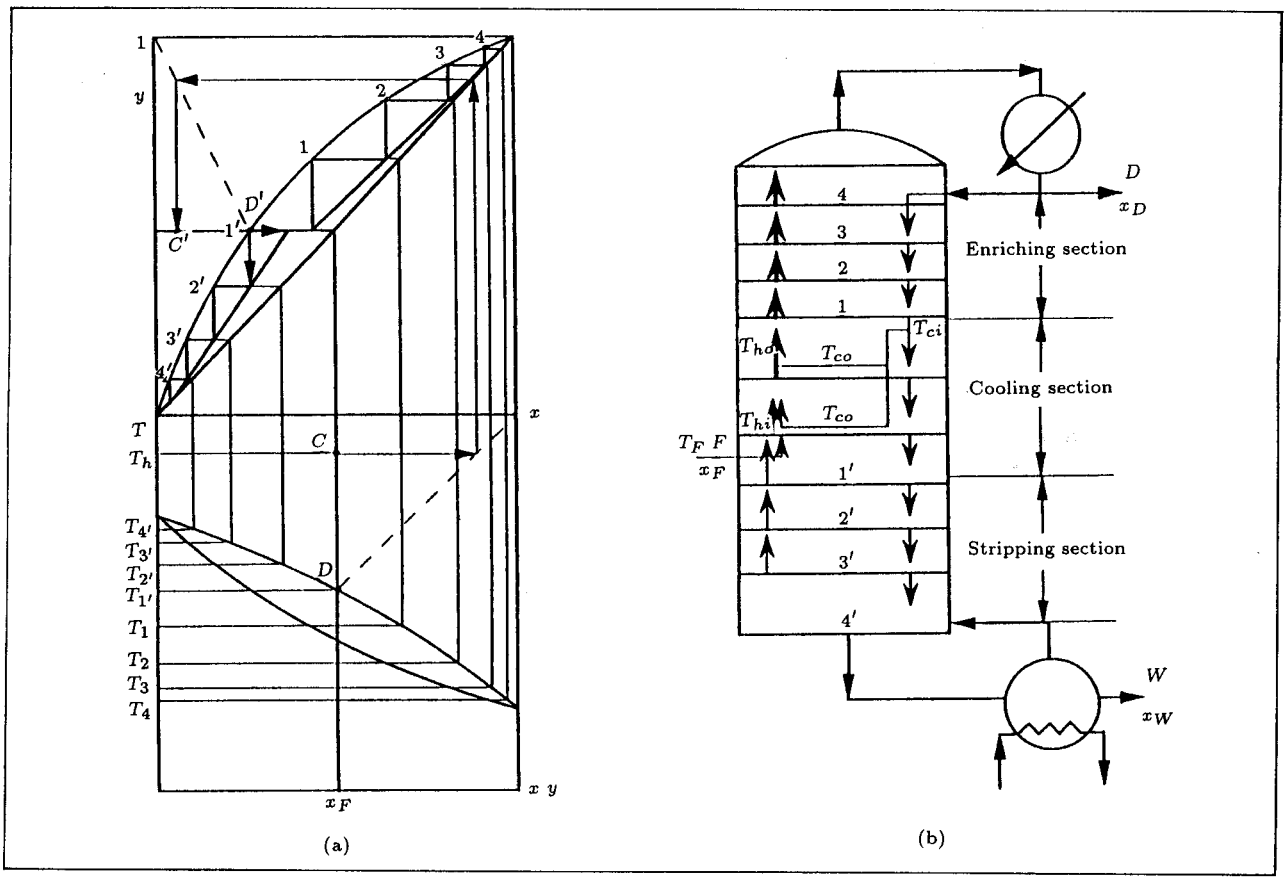

Figure 8. Proposed graphical method in the case of a superheated vapor feed.

feed, for a hypothetical total heat exchange area, A_h, we can write:

$$A_h = \frac{\dot{Q}_h}{K_h \Delta T_m} ,$$

where K_h = overall heat-transfer coefficient, (which should be determined empirically) and $\Delta T_m = \frac{\Delta T_2 - \Delta T_1}{ln(\Delta T_2/\Delta T_1)}$ is a logarithmic mean temperature difference. One may define $\Delta T_1 = T_{ho} - T_{ci}$ and $\Delta T_2 = T_{hi} - T_{co}$, T_{hi} = temperature of a mixture made up of feed and the vapor entering the cool section from the stripping section which is approximated as $T_{hi} = \frac{FT_F + V_m T_{ci}}{F + V_m}$, T_{ho} = temperature of the vapor leaving the stripping section, T_{ci} = temperature of the liquid entering the cooling section from the enriching section, T_{co} = temperature of vapor which is vaporized from the liquid entering the cooling section from the enriching section.

From this information, one can calculate the number of cooling stages in the cooling section by using the following equation:

$$N_h = \frac{A_h}{A_a} ,$$

where N_h = number of cooling stages and A_a = effective heat transfer area for each heat transfer stage which can be determined empirically. The more the feed condition deviates from the saturated state, the larger number of the cooling stages will be which is represented by a longer length of line $C'D'$ in Figure 8a.

Enriching and Stripping Sections

On the $x - y$ diagram, Figure 8a, we plot a horizontal feed-line ($K = 0$) and the operating line for the enriching, Equation 12, and stripping, Equation 7, sections. In Equation 7, we replace $\overline{L}$ and $\overline{V}$ with the following expressions:

$$\overline{L} = L + L'_n , \tag{19}$$

$$\overline{V} = \overline{L} - W = L + L'_n - W . \tag{20}$$

In the above expressions, L'_n is due to evaporation of liquid in the cooling section due to superheated vapor feed. It can be calculated by the following equation:

$$L'_n = \frac{\dot{Q}_h}{\lambda} = \frac{FC_V(T_F - T_d)}{\lambda} ,$$

where λ is an effective latent heat of evaporation for the liquid evaporating in the cooling section. In Equation 12, we replace R with $R_d + R_h$, where $R_h = L'_n/D$. Equation 19 is obtained by the material balance over the cooling section shown in Figure 8b. Substituting Equations 19 and 20 in Equation 7, we get the operating line equation in the stripping section:

$$y_m = \frac{L - L'_n}{L - L'_n - W} x_{m-1} - \frac{W}{L - L'_n - W} x_W .$$

A representative figure corresponding to this case is shown by Figure 8a. For the case of Figure 8, the number of stages in the enriching section are four and in the stripping section are four.

The heating section is represented as the subcooled line CD on the $T-(x, y)$ diagram and the subcooled line $C'D'$ on the $x - y$ diagram.

EXTENSION OF THE PROPOSED REVISED THEORY TO OTHER METHODS

The idea that we use in McCabe-Thiele method has also been applied to the Ponchon-Savarit method, stage-to-stage analytical method and shortcut method. The technique is the same as the above. To save space, the results of the revised distillation theory are reported in the appendix.

ACKNOWLEDGEMENTS

This research is supported in part by the National Science Foundation, USA, Grant No. CTS-9108595 and in part by the Daqing Petroleum Institute, PRC.

The authors thank Mr. Hui-Li for his help in editorial and graphical work on this paper.

REFERENCES

1. McCabe, W.L. and Thiele, E.W. "Graphical design of fractionating columns", *Ind. Eng. Chem.*, **17**, pp 605–612 (1925).
2. Thiele, E.W. "Computation of distillation", *Ind. Eng. Chem.*, **25**, pp 289–95 (1932).
3. McCabe, W.L., Smith, J.C. and Harriott, P. *Unit Operations of Chemical Engineering*, 4th Edn., McGraw-Hill Book Company, New York (1980).
4. Ponchon, M. "Application of graphs to the study of commercial fractional distillation", *Tech. Moderne*, **13**, pp 20, 55 (1921).
5. Savarit, R. *Arts et Metiers*, pp 65, 142, 178, 241, 266, 307 (1922).
6. Fenske, M.R. "Fractionation of straight-run Pennsylvania gasoline", *Ind. Eng. Chem.*, **24**, pp 482–485 (1932).
7. Gilliland, E.R. "New design calculation for multicomponent rectification", *Ind. Eng. Chem.*, **27**, pp 260–265 (1935).
8. Gilliland, E.R. "Multicomponent rectification", *Ind. Eng. Chem.*, **32**, p 1220 (1940).
9. Liddle, C.J. "Improved shortcut method for distillation calculations", *Chem. Eng.*, **75**, p 137 (1968).
10. Underwood, A.J.V. "Design of fractionating columns for complex mixtures", *J. Soc. Chem. Ind.*, **52**, p 223–7T (1933).
11. Underwood, A.J.V. "Fractional distillation of tenary mixtures", *J Inst. Petrol.*, **32** pp 598, 614 (1946).
12. Underwood, A.J.V. "Fractional distillation of multicomponent mixtures", *Chem. Eng. Prog.*, **44**, p 603 (1948).

APPENDIX

Application of Revised Theory to Ponchon-Savarit Method

Table 2. McCabe-Thiele method for binary distillation.

The Original Method [1,3,4]	**The Revised Method** [4]
Assumptions: Constant molal overflow (CMO).	**Assumptions:** Constant Molal overflow holds for the enriching and stripping sections. For heating (or cooling) section since the sensible heat changes are not negligible, CMO is not valid.
Definition of q: The number of moles of liquid flow in the stripping section that result from the introduction of each mole of feed, i.e.: $q = \frac{\bar{L}-L}{F}$.	**Definition of K:** $K \equiv \frac{\text{number of moles of liquid in the feed}}{\text{number of moles of the feed}}$.
The values of q with different feed types: feed condition — q Subcooled liquid — > 1 Liquid at its bubble point — $= 1$ Vapor-liquid mixture — $= 0 \sim 1$ Vapor at its dew point — $= 0$ Superheated vapor — < 0	**The values of K with different feed types:** feed condition — K Subcooled liquid — $= 1$ Liquid at its bubble point — ≈ 1 Vapor-liquid mixture — $= 0 \sim 1$ Vapor at its dew point — ≈ 0 Superheated vapor — $= 0$
Operating line for the enriching section: $y_{n+1} = \frac{R}{R+1}x_n + \frac{1}{R+1}x_D$	**Operating line for enriching section:** $y_{n+1} = \frac{R}{R+1}x_n + \frac{1}{R+1}x_D$
Operating line for the stripping section: $y_m = \frac{L+qF}{L+qF-W}x_{m-1} - \frac{W}{L+qF-W}x_W$	**Operating line for the stripping section:** A. Saturated feed: $y_m = \frac{L+KF}{L+KF-W}x_{m-1} - \frac{W}{L+KF-W}x_W$ B. Subcooled liquid feed: $y_m = \frac{L+F+L'_m}{L+F+V'_m-W}x_{m-1} - \frac{W}{L+F+V'_m-W}x_W$ where $V'_m = L'_m = \frac{\dot{Q}_c}{\lambda} = \frac{FC_L(T_b-T_F)}{\lambda}$ C. Superheated vapor: $y_m = \frac{L-L'_n}{L-L'_n-W}x_{m-1} - \frac{W}{L-L'_n-W}x_W$ where $V'_n = L'_n = \frac{\dot{Q}_h}{\lambda} = \frac{FC_V(T_F-T_d)}{\lambda}$
Feed line: $y_q = \frac{q}{q-1}x_q - \frac{1}{q-1}x_F$	**Feed line:** $y_K = \frac{K}{K-1}x_K - \frac{1}{K-1}x_F$

Table 3. Ponchon-Savarit method for binary distillation.

The Original Method [4,5]	**The Revised Method**
Starting point: Either the top (x_D) or the bottom (x_W) of the column (see Figures 11 and 12). For subcooled liquid (or superheated vapor) feed, there is no heating (cooling) section. The delta point of the enriching section (D'), feed point (F) and the delta point of the stripping section (W') are colinear (see Figure 12).	**Starting point:** The feed stage (x_f and y_f). See Figures 9 and 10. For subcooled liquid (or superheated vapor) feed, there is a heating (cooling) section. The delta point of the enriching section (D'), feed point (F) and the delta point of the stripping section (W') are not colinear (see Figure 10).

Table 4. The shortcut method for binary distillation.

The Original Method	**The Revised Method**
The minimum number of theoretical stages, Fenske equation [6]: $N_{\min} = \frac{\log[(\frac{x_D}{1-x_D})(\frac{1-x_W}{x_W})]}{\log \overline{\alpha}}$ where α_n = geometric mean of relative volatility which is $\overline{\alpha} = \sqrt{\alpha_D \alpha_W}$.	**The minimum number of theoretical stages, Fenske equation:** A. For the enriching section: $N_{\min,n} = \frac{\log[(\frac{x_D}{1-x_D})(\frac{1-x_f}{x_f})]}{\log \alpha_n} - 1$ where $\alpha_n = \sqrt{\alpha_D \alpha_F}$ B. For the stripping section: $N_{\min,m} = \frac{\log[(\frac{y_f}{1-y_f})(\frac{1-x_W}{x_W})]}{\log \alpha_m} - 1$ where $\alpha_m = \sqrt{\alpha_W \alpha_F}$
The number of actual stages, Gilliland Correlation [7-9]: $\frac{N - N_{\min}}{N+1} = 1.0 - 18.5715x$ for $0 \le x \le 0.01$ $\frac{N - N_{\min}}{N+1} = 0.545827 - 0.591422x + \frac{0.002743}{x}$ for $0.01 < x < 0.90$ $\frac{N - N_{\min}}{N+1} = 0.16595 - 0.16595x$ for $0.90 \le x \le 1.0$ where $x = \frac{\frac{L}{D} - (\frac{L}{D})_{\min}}{\frac{L}{D}+1}$	**The number of actual stages, Gilliland Correlation:** Same as the original method.
Minimum reflux ratio and actual reflux ratio: $R_{\min} = \frac{x_D - y_f}{y_f - x_f}$, actual reflux ratio R is specified otherwise chosen to be of the order of $(1.2R_{\min})$ to $(2.0R_{\min})$	**Minimum reflux ratio and actual reflux ratio:** A. Saturated feed $R_{\min} = \frac{x_D - y_f}{y_f - x_f}$ R is specified otherwise chosen to be of the order of $(1.2R_{\min})$ to $(2.0R_{\min})$ B. Subcooled liquid feed R is specified otherwise chosen to be equal to the order of $(1.2R_{\min})$ to $(2.0R_{\min})$ increased by R_c, where: $R_c = \frac{L'_m}{D} = \frac{\dot{Q}_c}{\lambda D} = \frac{FC_L(T_b - T_F)}{\lambda D}$ C. Superheated vapor feed $R_{\min} = \frac{x_D - y_f}{y_f - x_f}$ R is specified otherwise chosen to be equal to the order of $(1.2R_{\min})$ to $(2.0R_{\min})$ increased by R_h, where $R_h = \frac{L'_n}{D} = \frac{Q_h}{\lambda D} = \frac{FC_V(T_F - T_d)}{\lambda D}$

Table 5. The shortcut method for multicomponent distillation.

The Original Method	**The Revised Method**
The minimum number of theoretical stages, Fenske Equation [6]: $N_{\min} = \frac{\log[(\frac{X_{LK,D}}{X_{HK,D}})(\frac{X_{HK,W}}{X_{LK,W}})]}{\log \alpha_{(LK-HK)}}$ where $\alpha_{(LK-HK)} = \sqrt{\alpha_{(LK-HK),D}\alpha_{(LK-HK),W}}$	**The minimum number of theoretical stages, Fenske Equation:** For the enriching section: $N_{\min,n} = \frac{\log[(\frac{X_{LK,D}}{X_{HK,D}})(\frac{X_{HK,f}}{X_{LK,f}})]}{\log \alpha_{(LK-HK),n}}$ where $\alpha_{(LK-HK),n} = \sqrt{\alpha_{(LK-HK),D}\alpha_{(LK-HK),F}}$ For the stripping section: $N_{\min,m} = \frac{\log[(\frac{Y_{LK,f}}{Y_{HK,f}})(\frac{X_{HK,W}}{X_{LK,W}})]}{\log \alpha_{(LK-HK),m}}$ where $\alpha_{(LK-HK),m} = \sqrt{\alpha_{(LK-HK),W}\alpha_{(LK-HK),F}}$ for the stripping section.
Minimum reflux ratio, Underwood equation [10-12]: The first Underwood equation: $\sum \frac{\alpha_{i,HK}x_{i,F}}{\alpha_{i,LK} - \Phi} = 1 - q$ The first Underwood equation is used to calculate Φ. The second Underwood equation: $V_{\min} = \sum_{i=1}^{C} \frac{\alpha_{HK}D_{xi,D}}{\alpha_i - \Phi}$ The second Underwood equation is used to calculate $V_{\min}$. Minimum reflux ratio: $R_{\min} = V_{\min}/L_{\min}$ where $L_{\min} = V_{\min} - D$	**Minimum reflux ratio: Underwood equation:** Same as the original method.
Actual reflux ratio: The actual reflux ratio can be chosen to be equal to the order of $(1.2R_{\min})$ to $(2.0R_{\min})$ or specified.	**Actual reflux ratio:** A. Saturated feed The actual reflux ratio can be chosen to be equal to the order of $(1.2R_{\min})$ to $(2.0R_{\min})$ or specified. B. Subcooled liquid feed The actual reflux ratio can be specified or chosen to be equal to the order of $(1.2R_{\min .b})$ to 2.0 $(R_{\min .b})$ increased by R_c, where: $R_c = \frac{L'_m}{D} = \frac{\dot{Q}_c}{\lambda D} = \frac{\sum F_i C_{PL}(T_b - T_F)}{\lambda D}$ C. Superheated vapor feed The actual reflux ratio can be specified or chosen to be equal to the order of $(1.2R_{\min .d})$ to $(2.0R_{\min .d})$ increased by R_h, where: $R_h = \frac{L'_n}{D} = \frac{\dot{Q}_h}{\lambda D} = \frac{\sum F_i C_{PV}(T_F - T_d)}{\lambda D}$
The number of actual stages, Gilliland Correlation [7-9]: Same as that for binary system.	**The number of actual stages, Gilliland Correlation:** Same as the original method.

Table 6. The stage-to-stage analytical method for binary distillation.

The Original Method [3]	**The Revised Method**
Assumptions: CMO is valid. The saturated liquid and vapor lines on the enthalpy-concentration diagram are parallel.	**Assumptions:** Same as the original method.
Starting point: Either the top (x_D) or the bottom (x_W) of the column.	**Starting point:** The feed stage (x_f and y_f) A. For bubble point or subcooled liquid feed: $x_f = x_F \quad y_f = \frac{\alpha x_F}{1+(\alpha-1)x_F}$ B. For liquid-vapor mixture feed: $y_f = \frac{K}{K-1}x_f - \frac{1}{K-1}x_F$ $x_f = \frac{(\alpha-1)x_F + \alpha(K-1) - K}{2K(\alpha-1)}$ $+\frac{\sqrt{[K-(\alpha-1)x_F - \alpha(K-1)]^2 + 4K_{x_F}(\alpha-1)}}{2K(\alpha-1)}$ C. For dew point or superheated vapor feed: $y_f = y_F \quad x_f = \frac{y_F}{\alpha-(\alpha-1)y_F}$
Operating lines and equilibrium equations: For the enriching section: $y_n = \frac{L}{V}x_{n-1} + (1-\frac{L}{V})x_D$ $x_n = \frac{y_n}{a-(a-1)y_n}$ For the stripping section: $y_m = \frac{\overline{L}}{\overline{V}}x_{m-1} - (\frac{\overline{L}}{\overline{V}} - 1)x_W$ $x_m = \frac{y_m}{a-(a-1)y_m}$	**Operating lines and equilibrium equations:** A. Saturated feed For the enriching section: $x_n = \frac{R+1}{R}y_{n-1} - \frac{1}{R}x_D \quad y_n = \frac{\alpha x_n}{1+(\alpha-1)x_n}$ For the stripping section: $y_m = \frac{L_n+KF}{L_n+KF-W}x_{m-1} - \frac{W}{L_n+KF-W}x_W$ $x_m = \frac{y_m}{\alpha-(\alpha-1)y_m}$ B. Subcooled liquid feed For the enriching section: Same as the saturated feed. For the stripping section: $y_m = \frac{L+F+L'_m}{L+F+V'_m-W}x_{m-1} - \frac{W}{L+F+V'_m-W}x_W$ $x_m = \frac{y_m}{\alpha-(\alpha-1)y_m}$ C. Superheated vapor feed For the enriching section: $x_n = \frac{R_d+R_h+1}{R_d+R_h}y_{n-1} - \frac{1}{R_d+R_h}x_D$ $y_n = \frac{\alpha x_n}{1+(\alpha-1)x_n}$ where $R_h = \frac{L'_n}{D} = \frac{Q_h}{\lambda D} = \frac{FC_V(T_F-T_d)}{\lambda D}$, $R_d =$ the reflux ratio when the feed is at its dew point. For the stripping section: $y_m = \frac{L_n+KF}{L_n+KF-W}x_{m-1} - \frac{W}{L_n+KF-W}x_W$ $x_m = \frac{y_m}{\alpha-(\alpha-1)y_m}$

Table 7. The stage-to-stage analytical method for multicomponent distillation.

The Original Method [3]	**The Revised Method**
Assumptions: Constant molal overflow.	**Assumptions:** Constant molal overflow.
Starting point: Either the top ($x_{i,D}$) or the bottom ($x_{i,W}$) of the column.	**Starting point:** The feed stage ($x_{LK,f}$ and $y_{LK,f}$, or $x_{HK,f}$ and $y_{HK,f}$) $x_{LK,i}$, $x_{HK,f}$ can be obtained by solving the following two equations: $\left(\frac{x_{LK,f}}{x_{HK,f}}\right) = \frac{(x_{LK,D}D/V) + (x_{LK,W}W/\overline{V})}{(x_{HK,D}D/V) + (x_{HK,W}W/\overline{V})}$ $x_{LK,f} + x_{HK,f} = 1 - \sum x_{NK,f}$ $y_{LK,i}$, $y_{HK,f}$ can be calculated by the following equations: $y_{LK,f} = K_{LK,f}x_{LK,f}$ $y_{HK,f} = K_{HK,f}x_{HK,f}$
Operating lines and equilibrium equations: For the enriching section: $y_{i,n} = \frac{L}{V}x_{i,(n-1)} + (1 - \frac{L}{V})x_{i,D}$ $x_{i,j} = \frac{y_{i,j}/\alpha_{i-\text{ref}}}{\sum_{i=1}^{C}(y_{i,j}/\alpha_{i-\text{ref}})}$ For the stripping section: $y_{i,m} = \frac{\overline{L}}{\overline{V}}x_{i,(m-1)} - (\frac{\overline{L}}{\overline{V}} - 1)x_{i,W}$ $x_{i,j} = \frac{y_{i,j}/\alpha_{i-\text{ref}}}{\sum_{i=1}^{C}(y_{i,j}/\alpha_{i-\text{ref}})}$.	**Operating lines and equilibrium equations:** A. Saturated feed. For the enriching section: $x_{n,i} = \frac{R+1}{R}y_{(n-1),i} - \frac{1}{R}x_{D,i}$ $y_{n,i} = K_{n,i}x_{n,i}$ For the stripping section: $y_{m,i} = \frac{L+KF}{L+KF-W}x_{(m-1),i} - \frac{W}{L+KF-W}x_{W,i}$ $x_{m,i} = \frac{y_{m,i}}{K_{m,i}}$ B. Subcooled liquid feed For the enriching section: $x_{n,i} = \frac{R+1}{R}y_{(n-1),i} - \frac{1}{R}x_{D,i}$ $y_{n,i} = K_{n,i}x_{n,i}$ For the stripping section: $y_{m,i} = \frac{L+F+L'_m}{L+F+V'_m-W}x_{(m-1),i} - \frac{W}{L+F+V'_m-W}x_{W,i}$ $x_{m,i} = \frac{y_{m,i}}{K_{m,i}}$ C. Superheated vapor feed. For the enriching section: $x_{n,i} = \frac{(R_d+R_h+1)}{R_d+R_h}y_{(n-1),i} - \frac{1}{R_d+R_h}x_{D,i}$ $y_{n,i} = K_{n,i}x_{n,i}$ For the stripping section: $y_{m,i} = \frac{L+KF}{L+KF-W}x_{(m-1),i} - \frac{W}{L+KF-W}x_{W,i}$ $x_{m,i} = \frac{y_{m,i}}{K_{m,i}}$

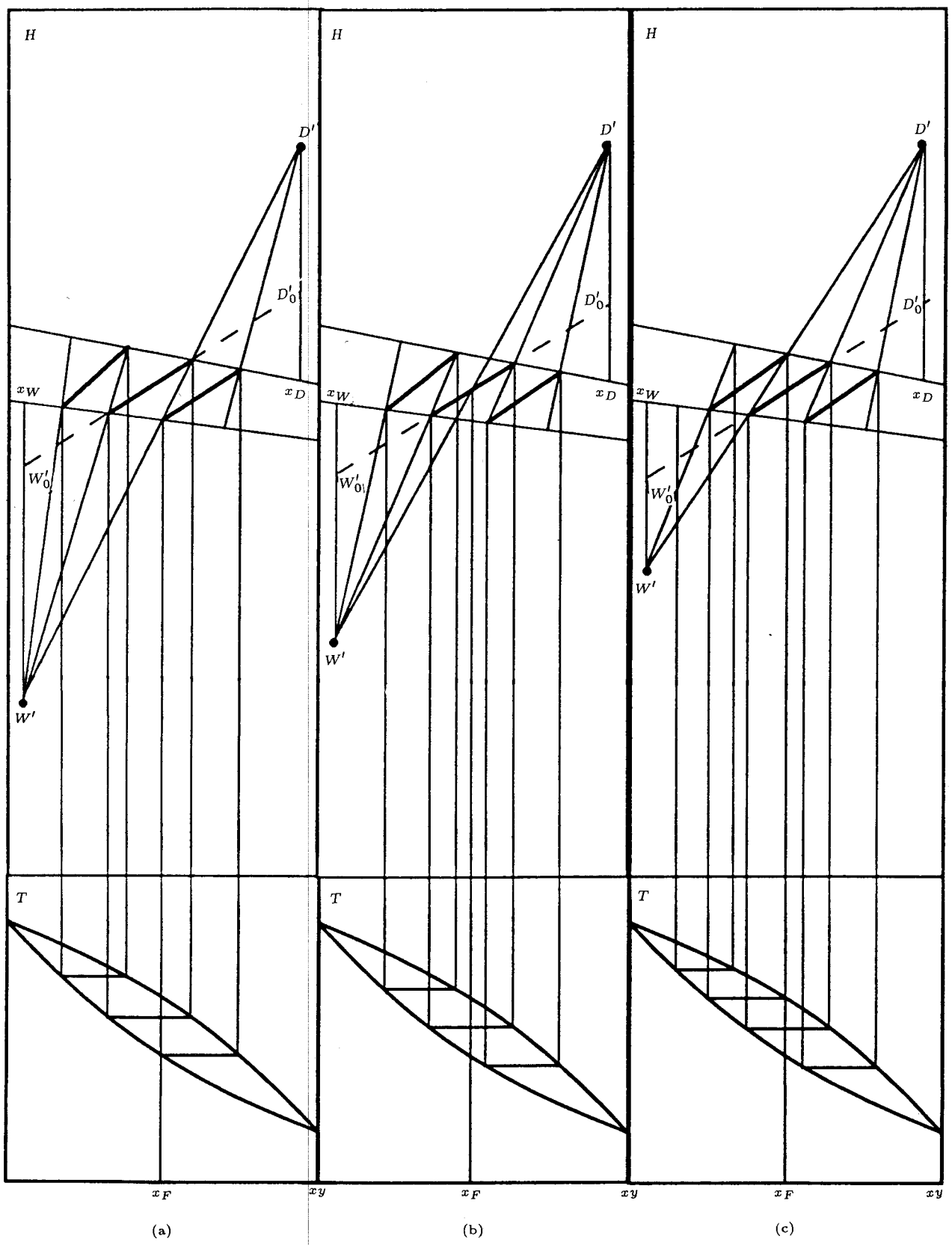

Figure 9. Revised $T - x, y$ and the Ponchon-Savarit diagrams: (a) Saturated liquid feed; (b) Liquid-vapor mixture feed; (c) Saturated vapor feed.

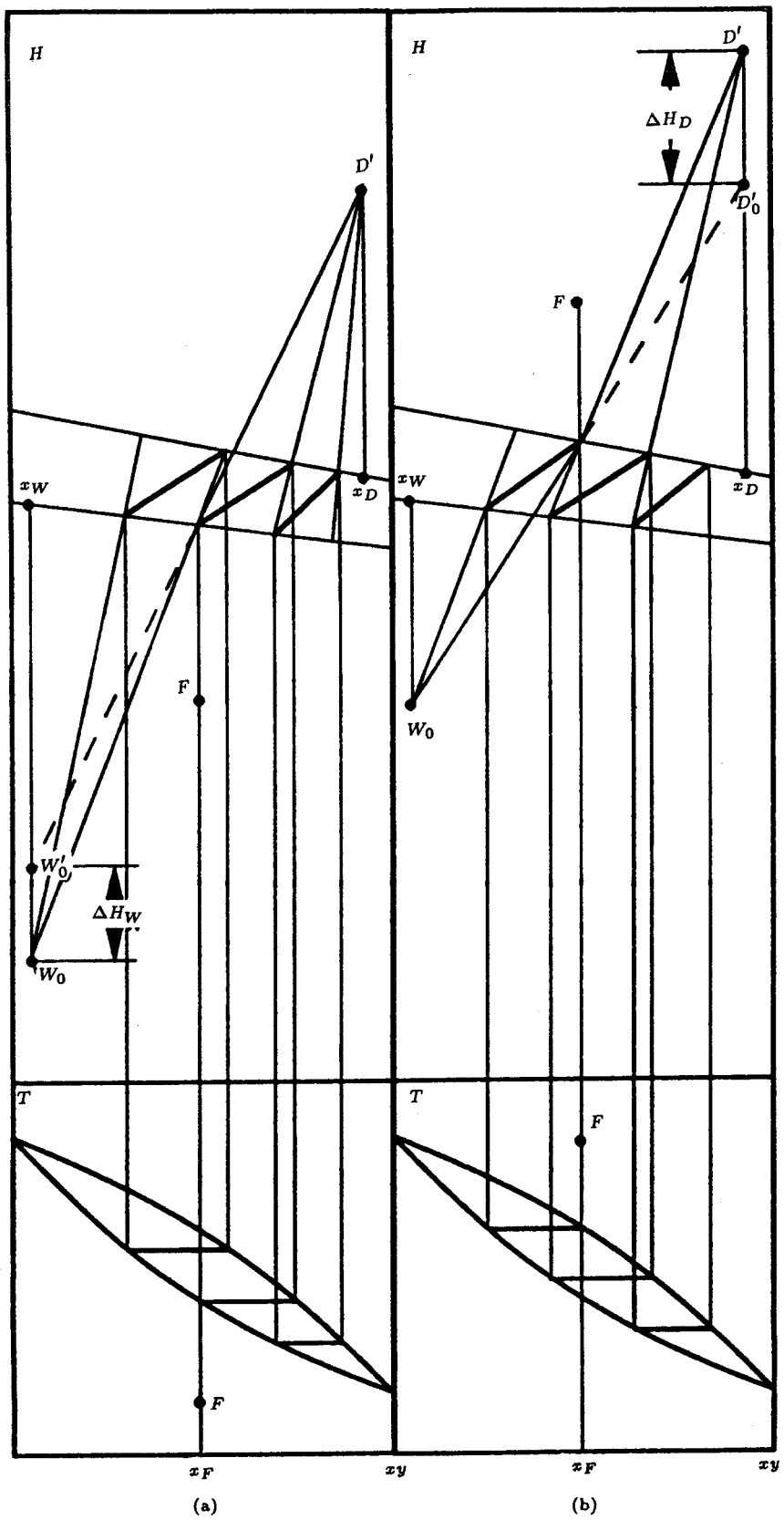

Figure 10. Revised $T - x, y$ and the Ponchon-Savarit diagrams: (a) Subcooled liquid feed; (b) Superheated vapor feed.

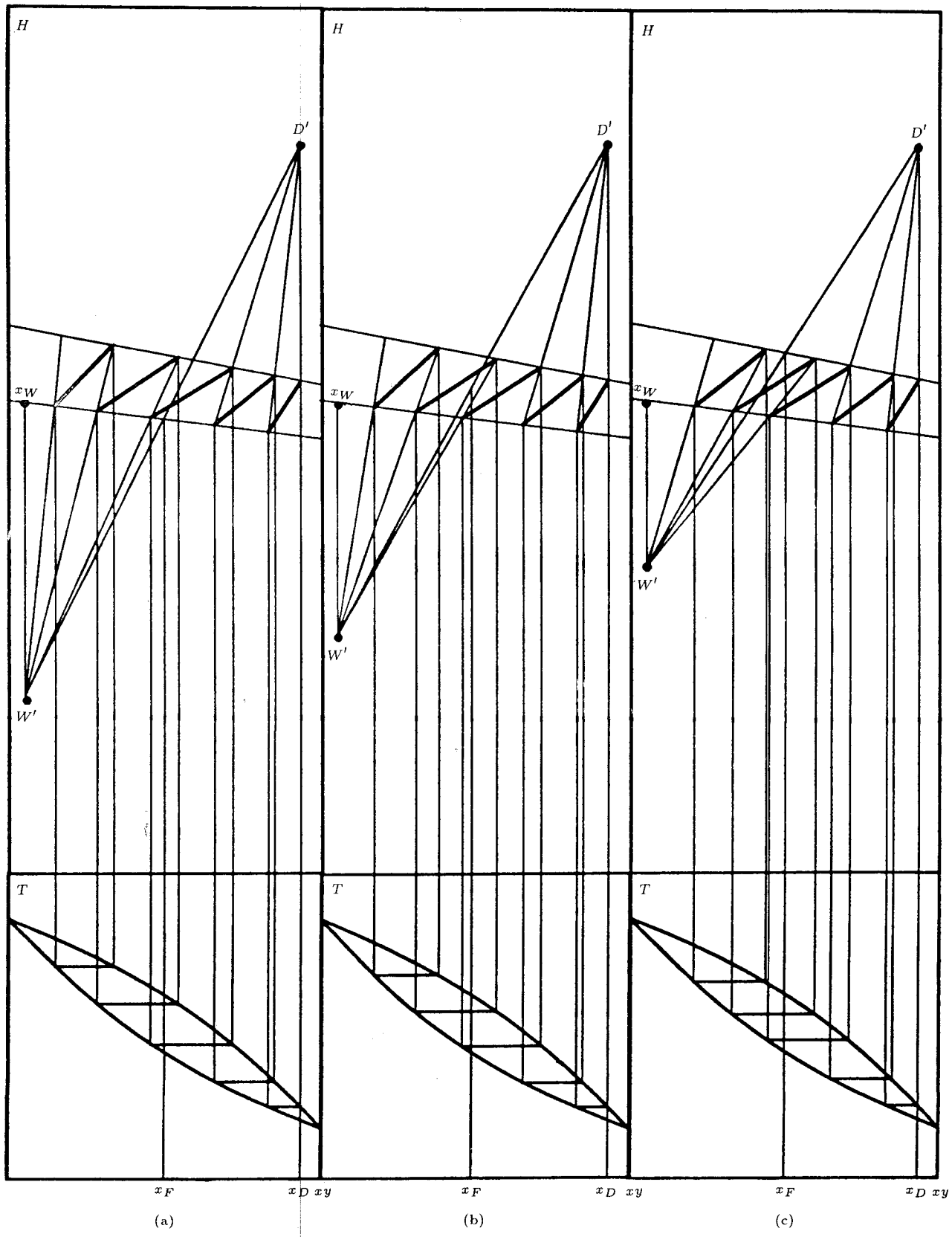

Figure 11. Original $T - x, y$ and the Ponchon-Savarit diagrams: (a) Saturated liquid feed; (b) Liquid-vapor mixture feed; (c) Saturated vapor feed.

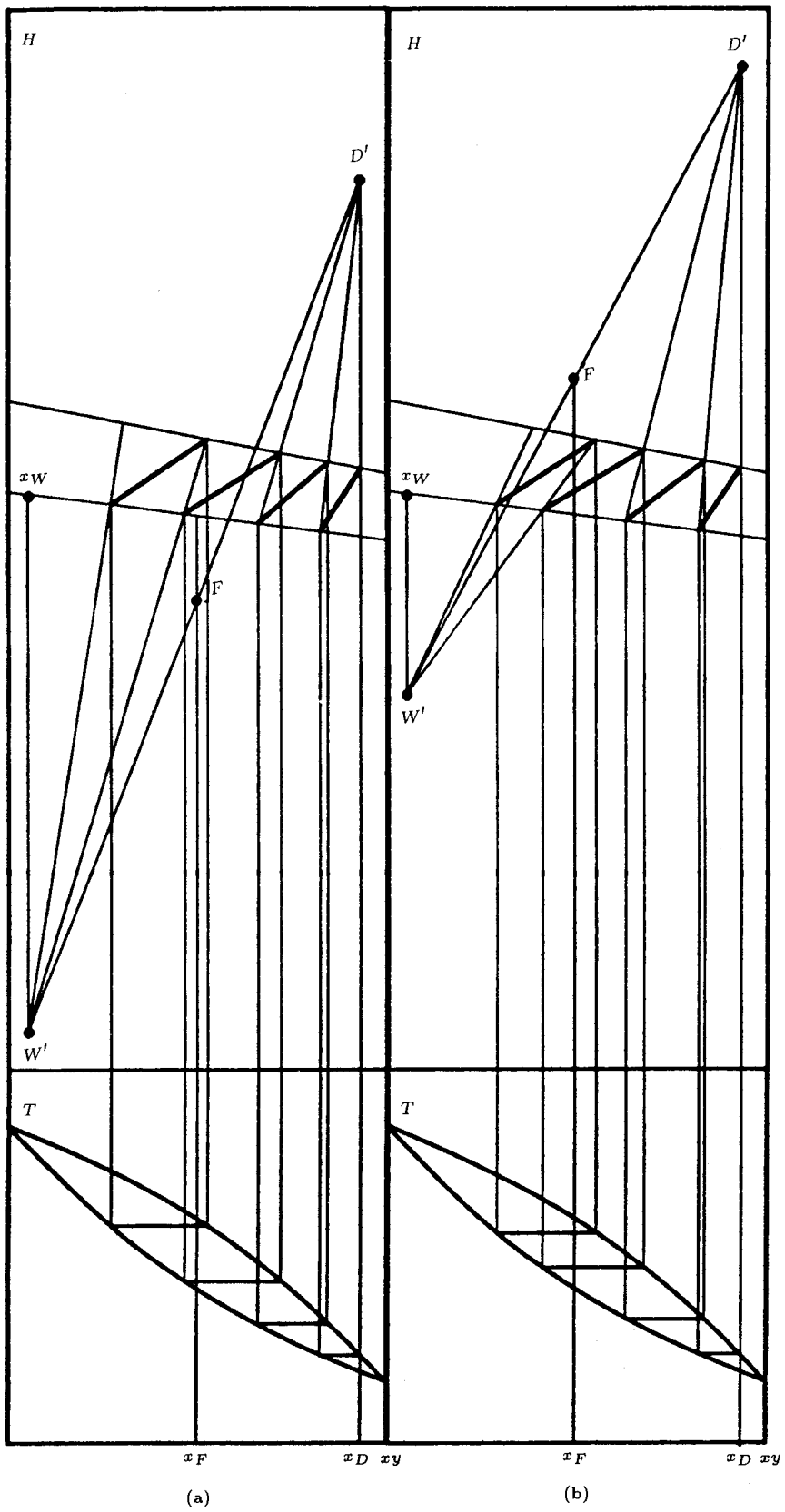

Figure 12. Original $T - x, y$ and the Ponchon-Savarit diagrams: (a) Subcooled liquid feed; (b) Superheated vapor feed.